WIRE DIAGRAM, CT4-DUAL

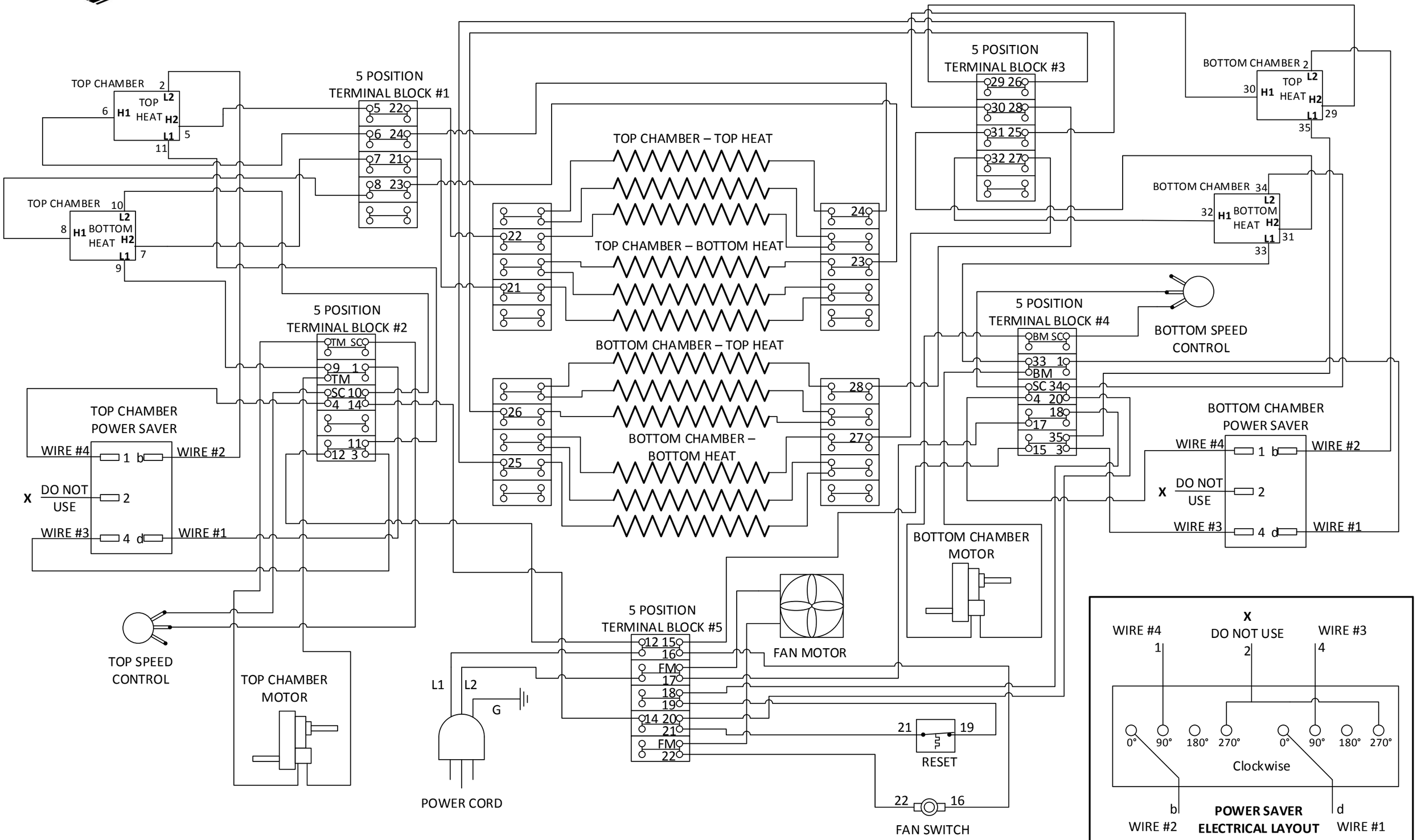

©2017 Document No. WD009