WIRE DIAGRAM, PO4

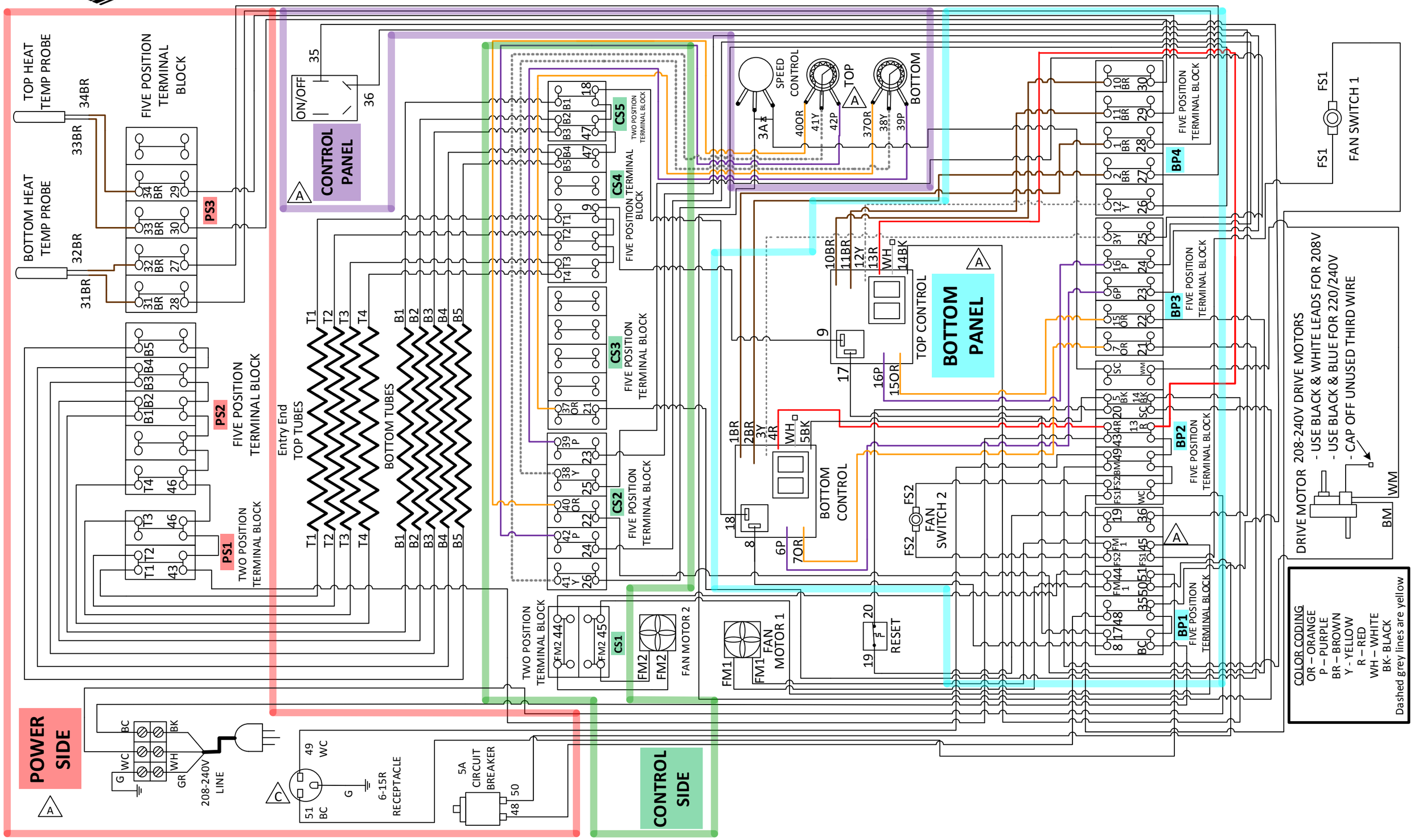

©2018